技术参数 Specifications

电气参数 Ratings:

◇最大工作电压
Max. Switching Voltage: 1000VDC

◇额定电流
Rated Current: 600A

◇主触点形式
Main Contact Type: 一组常开 SPST-NO

◇辅助触点
Auxiliary Contact: 可选配 Optional

◇辅助触点形式
Auxiliary Contact Type: 一组常开 SPST-NO

◇线圈额定电压
Coil Rated Voltage : 12VDC/24VDC/48VDC

◇使用环境温度
Ambient Operation Temperature : -40°C~+85°C

◇使用环境湿度
Ambient Operation Humidity : 5%~85%RH



认证/标准 Approvals/Standard:

◇REACH

◇RoHS

产品特征 Features&Benefits:

陶瓷密封结构，腔内充有氢气混合气体，防止触点氧化，接触电阻低且稳定；
Ceramic sealing structure with H_2 mixed gas filled in the chamber to protect the device from being oxidized, contact resistance being low and stable;

良好的抗短路能力，确保通过短路电流，触头仍能可靠闭合不斥开，产品不起火不爆炸；
High value of short-circuit current withstanding to ensure the contacts can be reliably closed when encountering short-circuit current, contributing to no risk of fire and explosion;

无极性灭弧设计，安装方向不敏感，适用回路双向电流的各种场景，使用安全可靠；
Non-polarity arc extinguishing design that is applicable to a range of scenarios with bidirectional current circuit safely and reliably;

可选配一组常开辅助触点；
A set of NO auxiliary contacts is optional;

能够在85°C环境下持续承载600A电流；
Carrying current 600A continuously at 85°C;

产品型号说明 Product Model:

	HC	F	600	C/	1000	-24	H	C	1	H	□	- ()
公司代码 Company Code												
系列代码 Series Code	F:方形系列 Square Series											
触点容量（额定电流） Contact Rating(Rated Current)	600:600A											
衍生型号 Derivative Model	C：衍生型 Derivative Model											
负载电压 Load Voltage	450:450VDC; 1000:1000VDC;											
线圈电压 Coil Voltage	12:12VDC; 24:24VDC; 48:48VDC											
主触点形式 Main Contact Type	H: 一组常开 SPST-NO											
线圈出线方式 Coil Input Terminal	C: 连接器 Connector											
负载引出端方式 Load Input Terminal	1: 内螺纹 Internal Thread											
辅助触点 Auxiliary Contact	无 Nil: 无辅助触点 No Auxiliary Contact; H: 一组常开 SPST-NO											
安装形式 Mounting	无 Nil: 立体安装 Vertical Mounting											
特性号 Special Code	XXX: 客户特殊要求 Customer Special Code; 无 Nil: 标准型 Standard											

HCF600C/□-□HC1

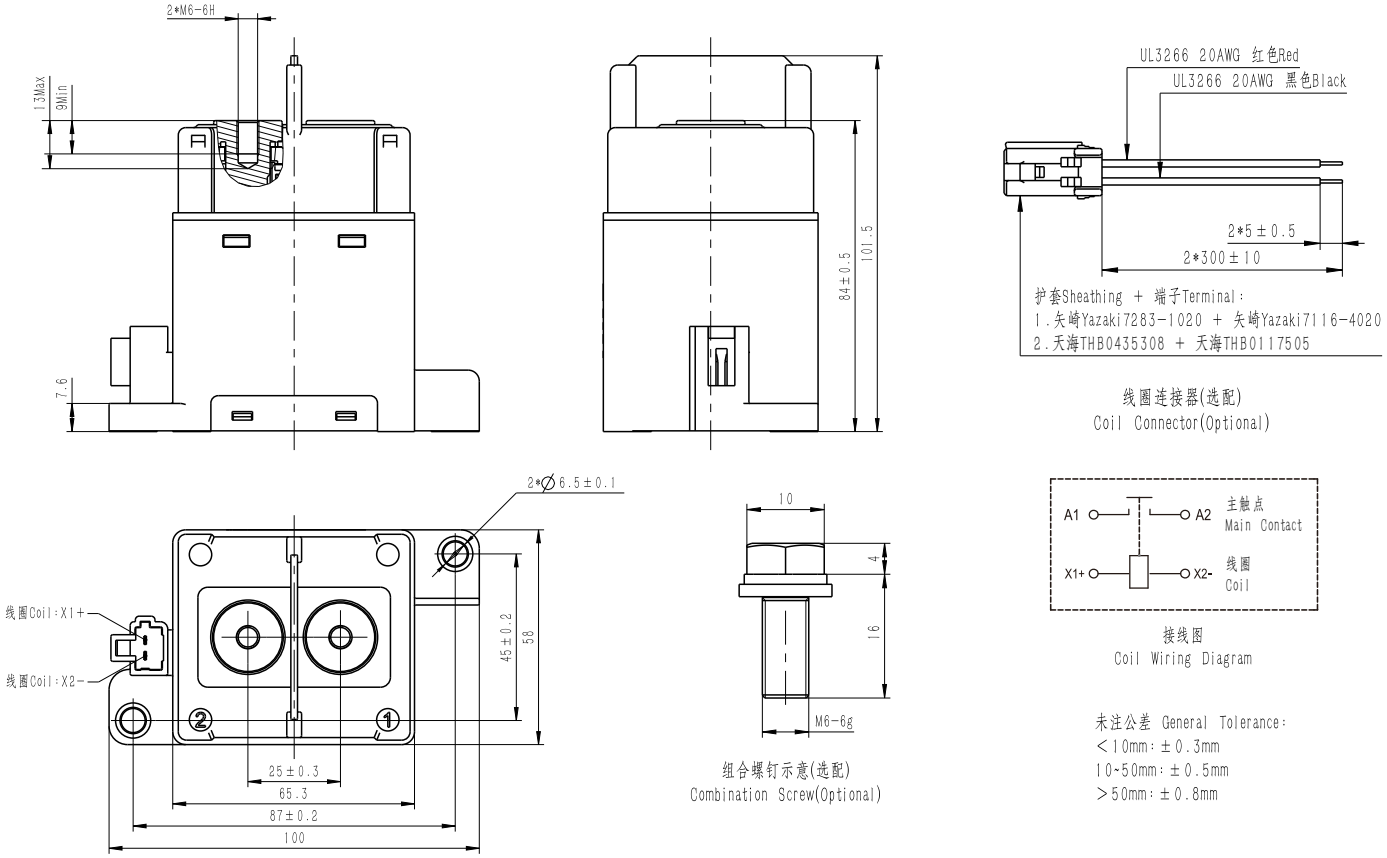

主触点参数 MAIN CONTACT DATA				
最大工作电压 Max. Switching Voltage	1000VDC		额定电流 Rated Current	600A
触点形式 Contact Arrangement	一组常开 SPST-NO		触点压降 Contact Voltage Drop	≤0.12V(at 600A)
短时承载电流 Limiting Short-time Current	600A:持续;700A:50s;1000A:50s;2000A:8s;3000A:1s			
电寿命（阻性负载） Electrical Life (Resistive Load)	450V 型 Model		1000V 型 Model	
	600A 450VDC 500 次(ops), 仅分断 Only Breaking		600A 1000VDC 150 次(ops), 仅分断 Only Breaking	
最大分断电流（阻性负载） Max. Breaking Current (Resistive Load)	2500A 800VDC 1次(ops); 2000A 1000VDC 1次(ops)			
过载分断（阻性负载） Overload Breaking (Resistive Load)	800A 450VDC 50 次(ops)			
耐短路电流 Short Circuit Current Withstanding	8000A(10ms) 不冒烟、不起火 No Smoke or Fire			
性能参数 CHARACTERISTIC DATA				
介质耐压 Dielectric Strength	主触点与线圈间(初始) Between Main Contacts and Coil (Initial)	≥4000VAC(1min)	绝缘电阻 Insulation Resistance	主触点与线圈间(初始) Between Main Contacts and Coil (Initial) ≥1000MΩ(1000VDC)
	断开主触点间(初始) Between Open Main Contacts (Initial)	≥3000VAC(1min)		断开主触点间(初始) Between Open Main Contacts (Initial) ≥1000MΩ(1000VDC)
耐冲击 Shock Resistance	功能性 Functional	20G 半正弦波 Half-Sine Wave 11ms	耐振动 Vibration Resistance	功能性 Functional 5.79G (10~2000Hz, 随机 Random)
	强度 Destructive	50G 半正弦波 Half-Sine Wave 6ms		
吸合时间 Operate Time		Max:30ms	机械寿命 Mechanical Life	$2*10^5$ 次(ops)
释放时间 Release Time		Max:10ms	重量 Weight	约 Approx 700g
线圈参数 COIL DATA				
额定电压 Rated Voltage	12VDC		24VDC	48VDC
吸合电压 Pick-up Voltage	≤9VDC		≤18VDC	≤36VDC
释放电压 Drop-out Voltage	≥1.2VDC		≥2.4VDC	≥4.8VDC
线圈功率 Rated Operating Power	约 Approx 50W(启动 Start); 5W(保持 Hold)		约 Approx 50W(启动 Start); 5W(保持 Hold)	约 Approx 50W(启动 Start); 5W(保持 Hold)
最大允许电压 Max. Allowable Voltage	16VDC		32VDC	64VDC

HCF600C/□-□HC1H

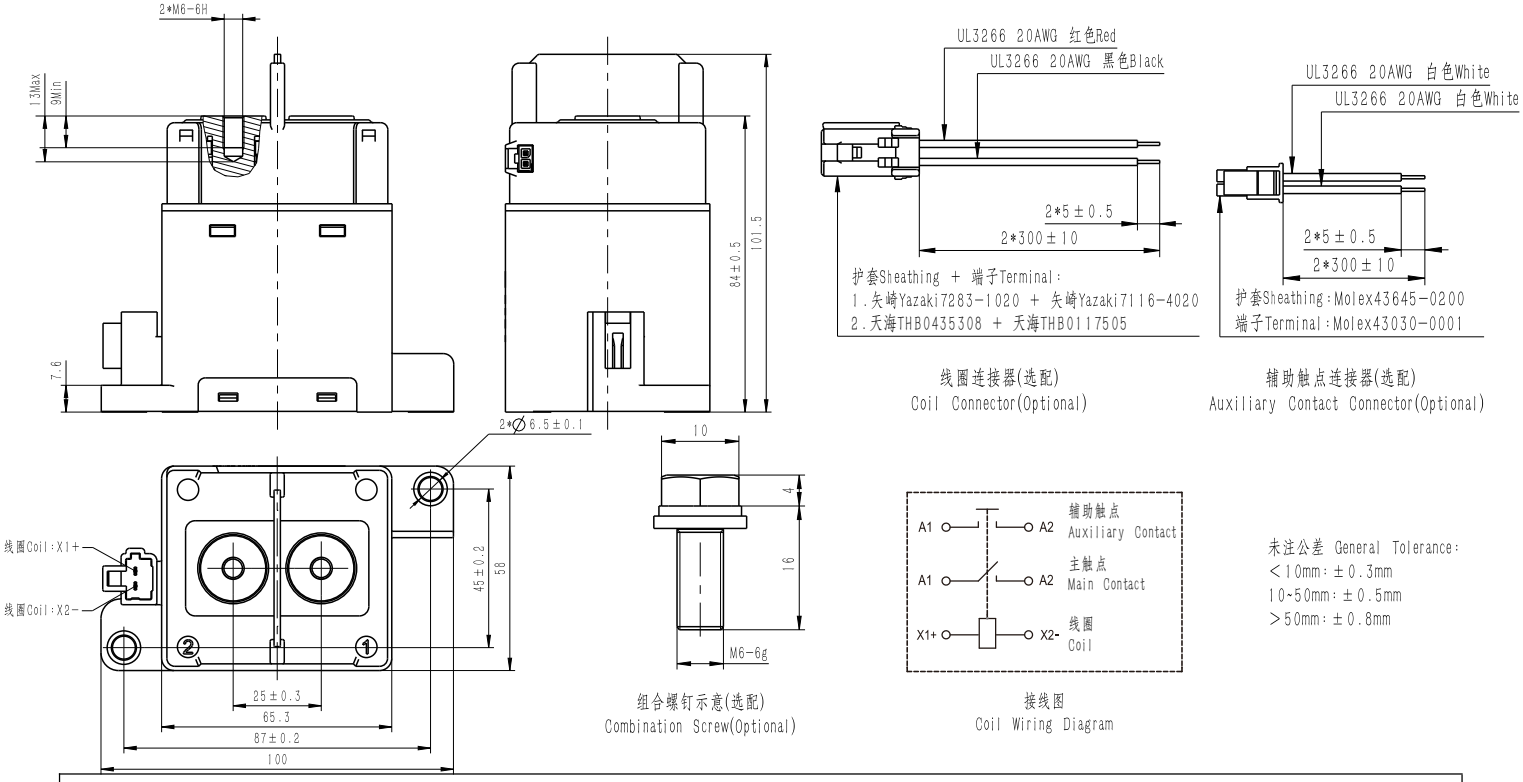

线圈连接器(选配)
Coil Connector(Optional)

辅助触点连接器(选配)
Auxiliary Contact Connector(Optional)

组合螺钉示意(选配)
Combination Screw(Optional)

接线图
Coil Wiring Diagram

未注公差 General Tolerance：
＜10mm：±0.3mm
10~50mm：±0.5mm
＞50mm：±0.8mm

主触点参数 MAIN CONTACT DATA					
最大工作电压 Max. Switching Voltage	1000VDC		额定电流 Rated Current	600A	
触点形式 Contact Arrangement	一组常开 SPST-NO		触点压降 Contact Voltage Drop	≤0.12V(at 600A)	
短时承载电流 Limiting Short-time Current	600A:持续;700A:50s;1000A:50s;2000A:8s;3000A:1s				
电寿命（阻性负载） Electrical Life (Resistive Load)	450V 型 Model		1000V 型 Model		
	600A 450VDC 500 次(ops), 仅分断 Only Breaking		600A 1000VDC 150 次(ops), 仅分断 Only Breaking		
最大分断电流（阻性负载） Max. Breaking Current (Resistive Load)	2500A 800VDC 1次(ops); 2000A 1000VDC 1次(ops)				
过载分断（阻性负载） Overload Breaking (Resistive Load)	800A 450VDC 50 次(ops)				
耐短路电流 Short Circuit Current Withstanding	8000A(10ms) 不冒烟、不起火 No Smoke or Fire				
性能参数 CHARACTERISTIC DATA					
介质耐压 Dielectric Strength	主触点与线圈间(初始) Between Main Contacts and Coil (Initial)	≥4000VAC(1min)	绝缘电阻 Insulation Resistance	主触点与线圈间(初始) Between Main Contacts and Coil (Initial)	≥1000MΩ(1000VDC)
	断开主触点间(初始) Between Open Main Contacts (Initial)	≥3000VAC(1min)		断开主触点间(初始) Between Open Main Contacts (Initial)	≥1000MΩ(1000VDC)
	主触点与辅助触点间(初始) Between Main Contacts and Auxiliary Contact (Initial)	≥3000VAC(1min)		主触点与辅助触点间(初始) Between Main Contacts and Auxiliary Contact (Initial)	≥1000MΩ(1000VDC)
耐冲击 Shock Resistance	功能性 Functional	20G 半正弦波 Half-Sine Wave 11ms	耐振动 Vibration Resistance	功能性 Functional	5.79G (10~2000Hz, 随机 Random)
	强度 Destructive	50G 半正弦波 Half-Sine Wave 6ms			
吸合时间 Operate Time	Max:30ms		机械寿命 Mechanical Life	2*10⁵ 次(ops)	
释放时间 Release Time	Max:10ms		重量 Weight	约 Approx 700g	
线圈参数 COIL DATA					
额定电压 Rated Voltage	12VDC		24VDC	48VDC	
吸合电压 Pick-up Voltage	≤9VDC		≤18VDC	≤36VDC	
释放电压 Drop-out Voltage	≥1.2VDC		≥2.4VDC	≥4.8VDC	
线圈功率 Rated Operating Power	约 Approx 50W(启动 Start); 5W(保持 Hold)		约 Approx 50W(启动 Start); 5W(保持 Hold)	约 Approx 50W(启动 Start); 5W(保持 Hold)	
最大允许电压 Max. Allowable Voltage	16VDC		32VDC	64VDC	
辅助触点参数 AUXILIARY CONTACT DATA					
辅助触点形式 Auxiliary Contact Arrangement	一组常开 SPST-NO		辅助触点使用范围 Auxiliary Contact Range	100mA/8VDC~2A/30VDC	
辅助触点电阻 Auxiliary Contact Resistance	≤200mΩ (at 100mA)				

电流承载曲线 Current Carry Curve:

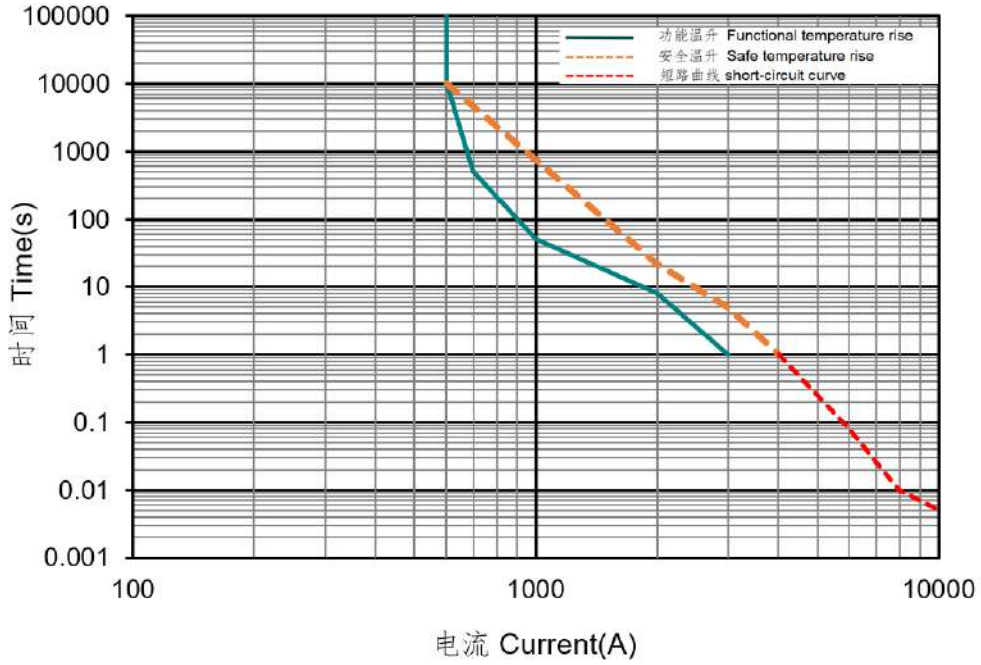

备注 Remark：

1.该曲线数据供参考，选型以及短路匹配保险丝以实际条件为准。
The curve data is for reference, and the selection and short-circuit matching fuse are subject to the actual conditions.

2.该曲线设定的安全温度上限为180℃，如产品长时间工作，建议温度上限不超过130℃。超出安全温度接触器会有失效风险。
The upper limit of the safe temperature set by this curve is 180°C, if the product works for a long time, it is recommended that the upper limit of the temperature should not exceed 130°C.Contactors that exceed the safe temperature are at risk of failure.

3.超出安全曲线工况如保险丝不能及时熔断或系统电流停止，接触器会存在发生粘连、起火、爆炸风险。
If the fuse cannot be blown in time or the system current stops, the contactor will be adhesed, caught fire and exploded Fried risk.

4.该曲线安全温升和功能温升环境温度最大为85℃，导线截面积≥400mm²，线圈电压为额定电压。
The maximum ambient temperature of the safe temperature rise and functional temperature rise of the curve is 85°C, the cross-sectional area of the wire is ≥400mm², and the coil voltage is the rated voltage.

使用注意事项 Caution:

1.规格书内的各项性能参数是基于标准测试条件下测得的初始值。
All the performance parameters listed in this specification are deemed as initial value measured under standard testing conditions.

2.使用环境温度-40°C~+85°C，湿度5%~85%RH。
Used in environment temperature -40°C~+85°C, humidity 5%~85%RH.

3.请避免安装在强磁场（变压器、磁铁周围）或发热物体附近。
Please avoid installing the device near high magnetic fields (eg.transformers or magnetics) or hot objects.

4.电寿命试验为阻性负载时的数值，应用在L/R≥1ms的感性负载回路时，请与感性负载并行采取浪涌吸收措施。未采取措施的情况下，可能会成电气寿命下降、发生切断不良。
The electrical life test is performed with resistive load. Therefore, please take surge absorption measures in parallel with inductive load when the device is applied to inductive load circuit with L/R≥1ms. Otherwise, the electrical life is likely to decline, resulting in poor cutting off.

5.应用在容性负载回路时，请注意采取预充等措施，建议接触器闭合压差控制在20V以内。如未采取措施，可能会造成触点粘连。
Measures including precharging etc. must be taken if the device is to be applied in capacitive load circuit.It is suggested that the differential pressure be controlled within 20V when the contactor is in closed position. Otherwise, it might lead to contact adhesion.

6.接触器的线圈有极性，因此在进行线圈的连接时，请按接线图的指示进行操作。
The coils of the contactor are polarized, so follow the connection schematic when connecting the coils.

7.接触器内置单触发脉冲发生电路，请通过快速上升沿（脉冲式供电方式）驱动线圈；接触器接通信号后，约300ms后线圈电流自动切换，请避免间隔不满300ms的重复切换操作。
The contactor has a built-in one-shot pulse generator circuit, please drive the coil with a quick startup (pulse power supply mode); after the signal enters contactor, automatic coil current switching occurs after approximately 300ms, please avoid repetitive switch in which interval time is less than 300ms.

8.请避免在引出端上粘附油脂等异物，建议使用400mm²以上规格导线，否则有可能造成引出端异常发热。
Please avoid adhering such foreign matters as grease etc. on the leading-out terminals. Over 400mm² conductors shall be used. Otherwise, it will casue abnormal heating of leading-out terminals.

9.请避免在使用或运输过程中发生撞击或跌落。为保持产品的性能，撞击或跌落后不建议继续使用。
Please avoid collision or falling during use or transportation. In order to maintain the performance of the product, it is not recommended to continue to use it after impact or fall.

10.当产品使用1个及多个导电铜排连接时，请确保导电铜排与触点端面紧密贴合（多个铜排需确保大电流的导电铜排最贴近触点端面，小电流的导电铜排其次），然后是平垫圈、弹簧垫圈、螺钉。不正确的连接顺序可能造成严重过热，参考下图1：
When the product is connected with one or more conductive copper bars, please ensure that the conductive busbars closely fit the contact terminal surface (The conductive copper bars with high current must be closet to the contact terminal surface if there are multiple copper bars and then conductive busbars with low current), followed by flat washers, spring washers and screws.Incorrect connection sequence perhaps give rise to severe overheatng. Refer to Figure 1 as follows:

11.螺钉安装时，螺纹咬合深度不能过浅，否则有可能导致滑牙松脱，建议咬合深度至少螺纹深度的2/3。
When installing the screws, the thread engagement depth shall not be too shallow, otherwise it may cause the sliding teeth to become loose. It is recommended that the engagement depth be at least 2/3 of the thread depth.

12.为防止出现松动，接触器安装时请使用垫圈螺钉锁紧，各部位的螺钉锁紧扭矩请控制在以下范围：
To prevent looseness, the contactor shall be locked with washer screws during installation, and the screw locking torque of each part shall be controlled within the following range:

主负载安装部位 Main loading installation part				接触器壳体安装部位(图2) Contactor shell installation department (figure 2)		
安装方式 Installation method	扭矩要求 Torque requirements	铜排孔径 Diameter of busbar	铜排厚度 Busbar thickness	安装方式 Installation method	扭矩要求 Torque requirements	底板孔径 Diameter of baseboard
M6螺钉 Screw	6N·m~8N·m	Ø6mm~Ø6.5mm	3~5mm	M6螺钉 Screw	6N·m~8N·m	M6

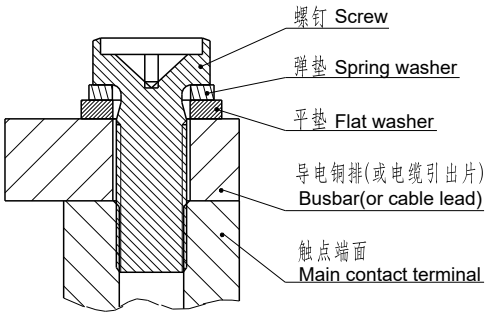

图1(Fig1)

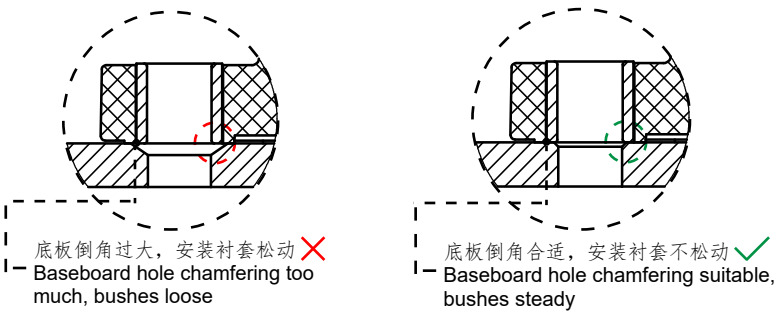

图2(Fig2)